Code	Hydraulic scheme
05	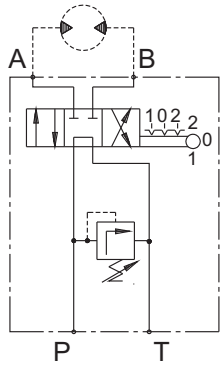

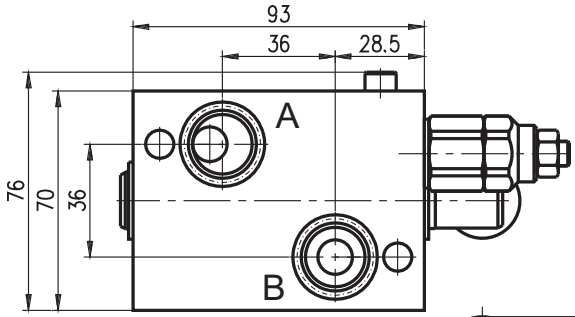

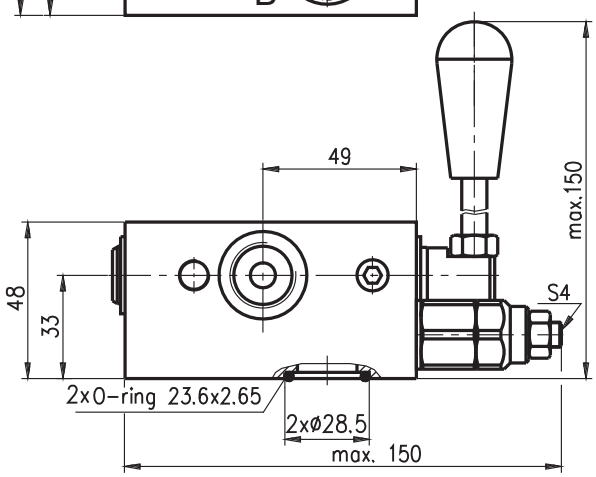

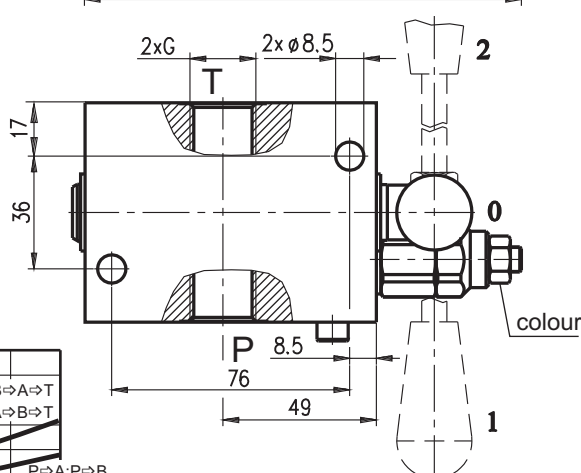

Pressure range			
Code	Standard setting (Q=5l/min)	Abj. pressure range	Colour
	bar	*bar*	-
10	80	10...100	White
25	180	30...250	Yellow

Code	Adjustments	
A	Leakproof hex. socket screw	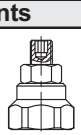
B	Handknob and locknut	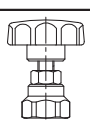
C	Sealing cap	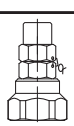

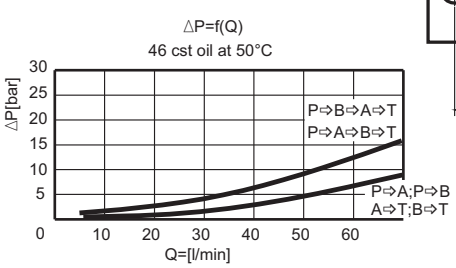

Type	Nom. flow rate	$P_{max.}$	Port threads **G**
	L/min	*bar*	-
BDR 1205 . /.. .	70	250	G1/2 - DIN 3852

ORDERING CODE

BD R 12 05 L / 10 A

- Type
- Hydraulic motor type - code: MP or MR - **R**
- Port threads G - code: G1/2 - **12**
- Code scheme: **05**
- Body material - code: Aluminium - **Omit**; Brass - **L**
- Pressure range code: **10; 25**
- Code adjustments: **A; B; C** (see table above)